Rotomixx®

ADMIX®

Cost Effective and Reliable Total Stainless Batch Mixers

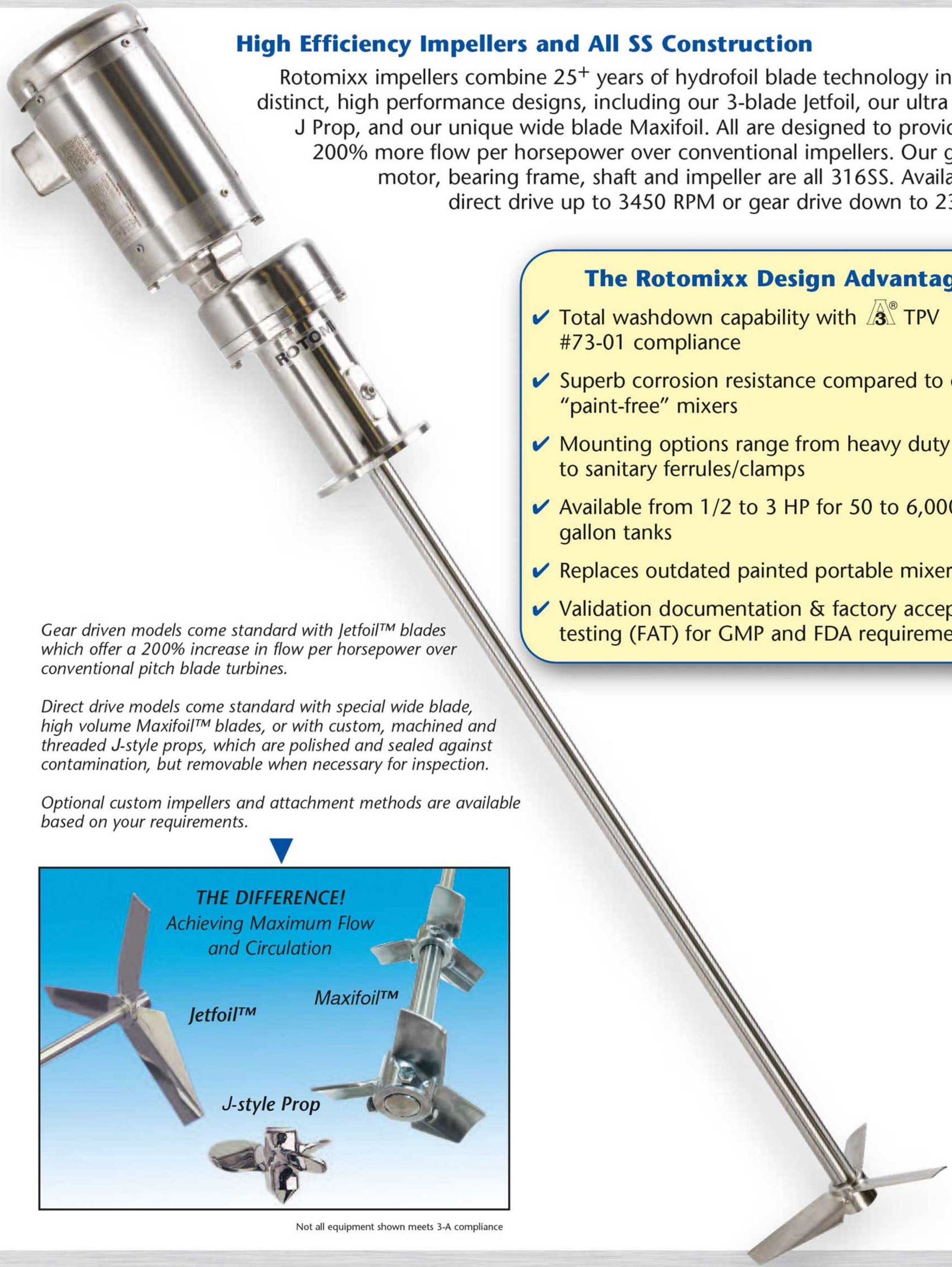

High Efficiency Impellers and All SS Construction

Rotomixx impellers combine 25+ years of hydrofoil blade technology into three distinct, high performance designs, including our 3-blade Jetfoil, our ultra sanitary J Prop, and our unique wide blade Maxifoil. All are designed to provide up to 200% more flow per horsepower over conventional impellers. Our gearbox, motor, bearing frame, shaft and impeller are all 316SS. Available as a direct drive up to 3450 RPM or gear drive down to 235 RPM.

The Rotomixx Design Advantage

- ✔ Total washdown capability with 3-A® TPV #73-01 compliance
- ✔ Superb corrosion resistance compared to other "paint-free" mixers
- ✔ Mounting options range from heavy duty clamps to sanitary ferrules/clamps
- ✔ Available from 1/2 to 3 HP for 50 to 6,000 gallon tanks
- ✔ Replaces outdated painted portable mixers
- ✔ Validation documentation & factory acceptance testing (FAT) for GMP and FDA requirements

Gear driven models come standard with Jetfoil™ blades which offer a 200% increase in flow per horsepower over conventional pitch blade turbines.

Direct drive models come standard with special wide blade, high volume Maxifoil™ blades, or with custom, machined and threaded J-style props, which are polished and sealed against contamination, but removable when necessary for inspection.

Optional custom impellers and attachment methods are available based on your requirements.

Not all equipment shown meets 3-A compliance

Your Mixing Technology Partner | www.admix.com

Small Package, Big Results!

The Rotomixx provides rapid blend times at higher viscosities and volumes. For holding tanks, suspension tanks, storage or rapid mixing, the Rotomixx offers superior circulation and flow characteristics normally obtainable only with larger, higher horsepower agitators.

Model	100RXD	100RXG
Drive Type	Direct	Helical gear reduction
Output Speed (RPM)	1750	235 to 851
Maximum Motor Frame	145TC	145TC
Mounting Arrangement	Flange, C-Clamp, and Sanitary Ferrule	Flange, C-Clamp, and Sanitary Ferrule
Shaft Engagement (inches)	5"	5"
Shaft Diameter (inches)	1" and 1.25"	1" and 1.25"
Maximum Shaft Length (inches)	48"	84"
Approximate Weight (lbs.)	75 to 115	105 to 160

Rotomixx

	A	B	C
100RXD	12	7.9	1.00
125RXD	12	7.9	1.25
100RXG	12	13	1.00
125RXG	12	13	1.25

Dimensions are in inches

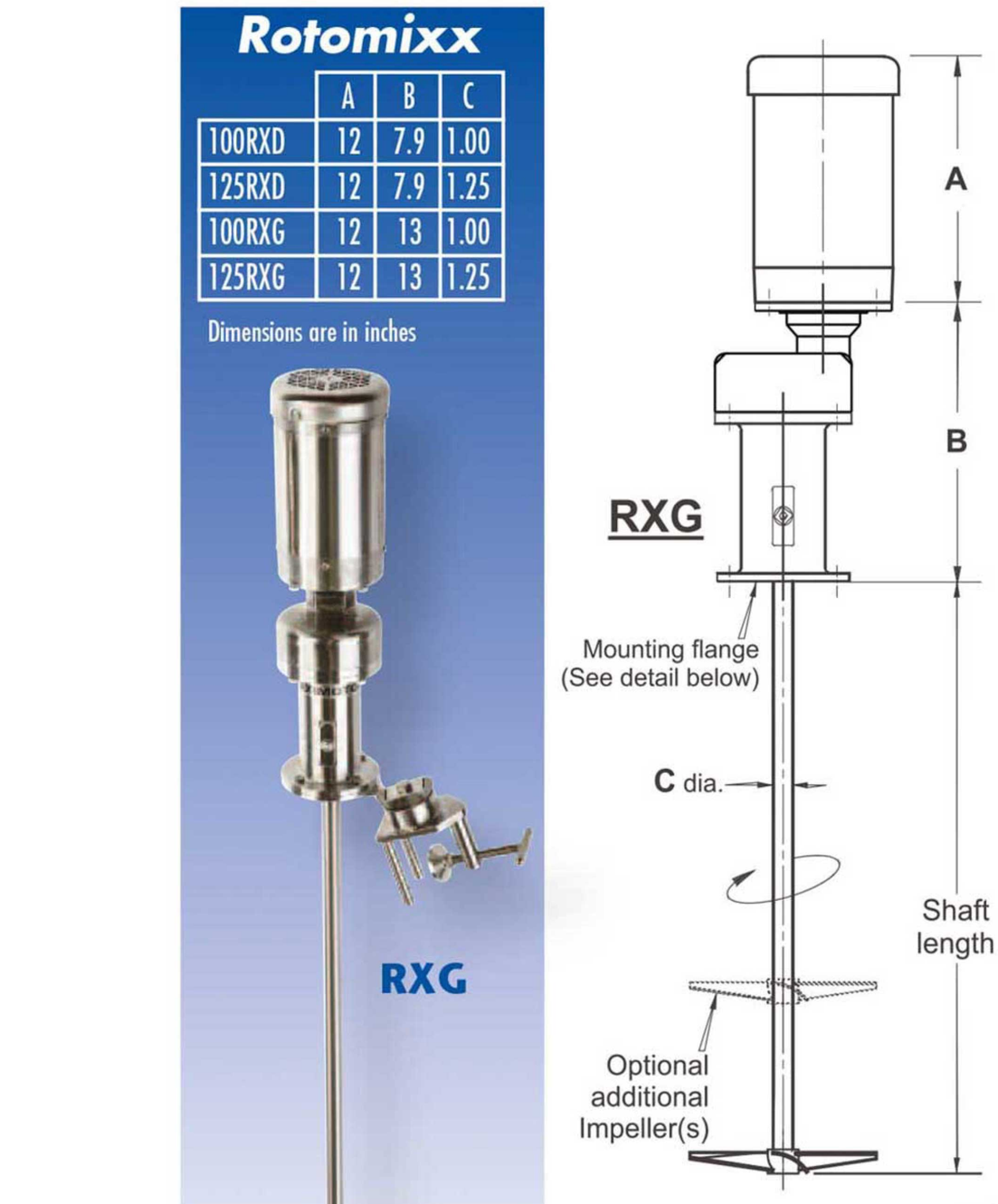

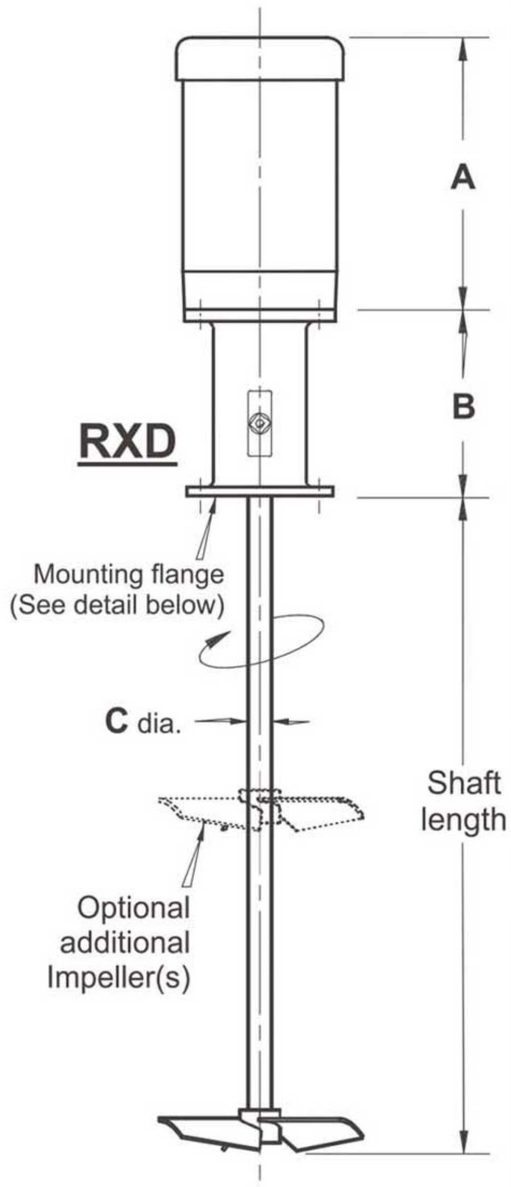

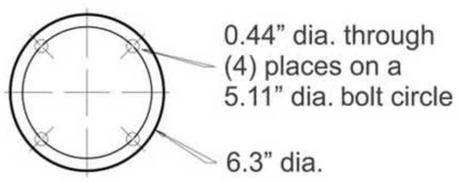

RXG and RXD MOUNTING FLANGE DETAIL

Selection & Performance

Selection of the proper Rotomixx model for your application is simplified with our **MixxScale (MS)** sizing criteria. Our **MS** program utilizes bulk fluid velocity and impeller size (foil diameter to tank diameter ratio) to provide the desired level of agitation, suspension of solids, and top-to-bottom flow control. Our high efficiency Jetfoil impellers provide maximum performance using the lowest horsepower consumption and an optimized gearbox size to reduce overall costs.

Our **MS** selections range from 1 through 4 with MS = 1 providing a lower level of agitation with little vortex and longer blend times (10-30 minutes). MS = 4 is characterized by very vigorous agitation with excellent suspension and very rapid blend times of under 10 minutes.

These tables provide the best Rotomixx selection for the designated level of agitation, tank volume and viscosity.

MixxScale 1

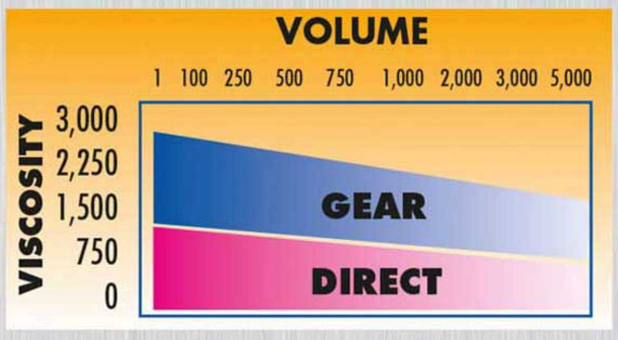

MixxScale 2

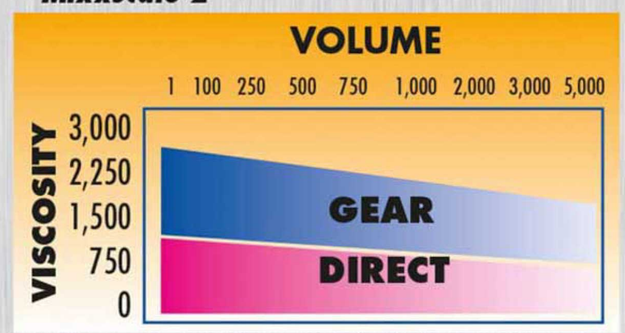

MixxScale 3

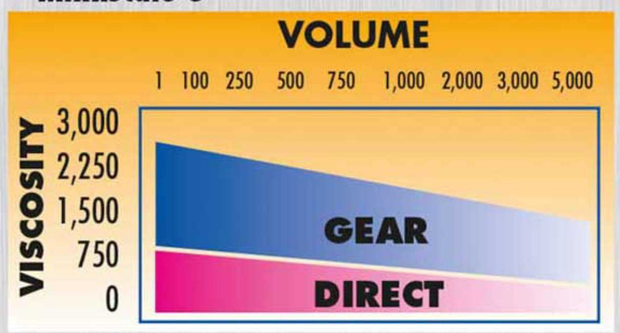

MixxScale 4

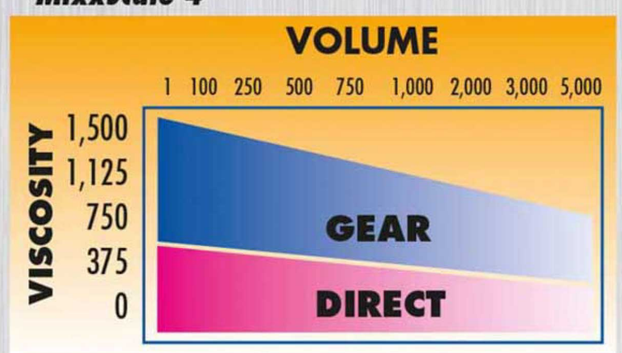

EMPLOYEE OWNED ...
CUSTOMER FOCUSED

Printed in USA ROTOMIXX-11/15

www.admix.com | 800-466-2369 ADMIX® 144 Harvey Road | Londonderry, NH 03053